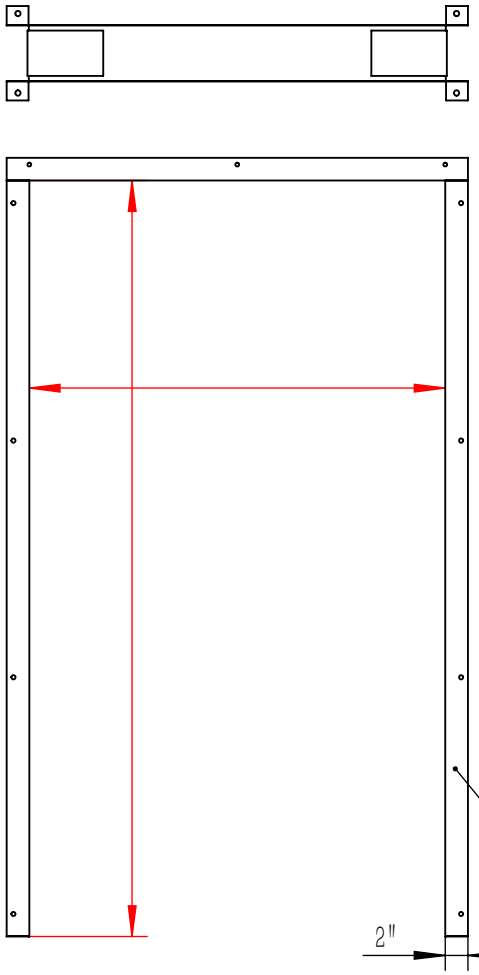

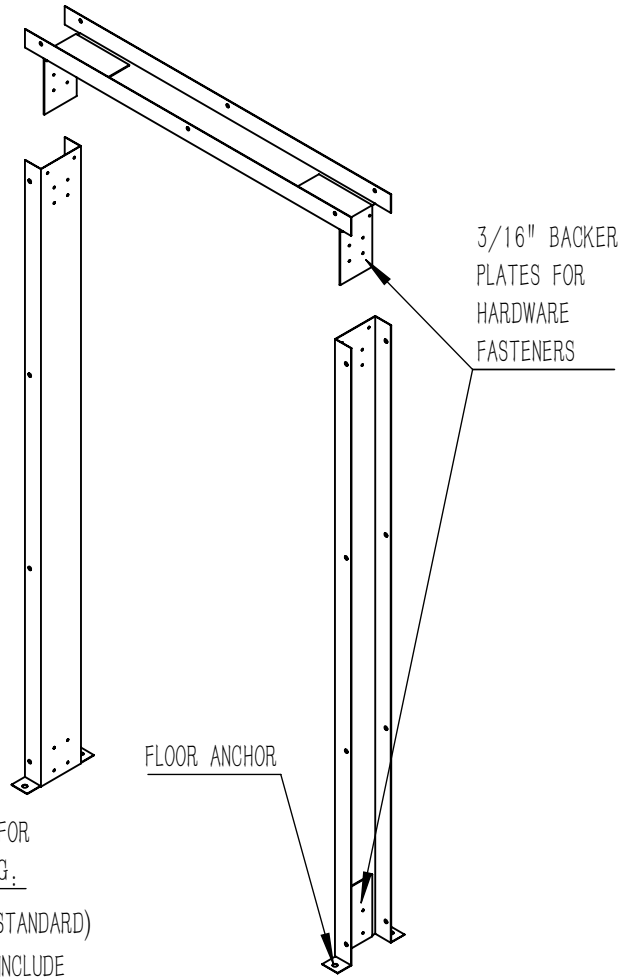

SPECIFICATIONS:

FINISHED OPENING WIDTH:

FINISHED OPENING HEIGHT:

WALL THICKNESS:

WALL TYPE:

ROUGH OPENING CALCULATIONS:

FINISHED WIDTH PLUS 1 1/4"=

FINISHED HEIGHT PLUS 5/8"=

MATERIAL:

12 GA. 304 BRUSHED STAINLESS STEEL: ☐

12 GA. POWDER COATED MILD STEEL: ☐

BLACK: ☐ WHITE: ☐

GRAY: ☐ CUSTOM:

QUANTITY:

QUOTE: ☐ ORDER: ☐ NUMBER:

CUSTOMER:

JOB:

DATE:

OTHER NOTES:

SIGNATURE:

SHIP TO:

TDK DOORS

C Wrap Door Frame shop Drawing