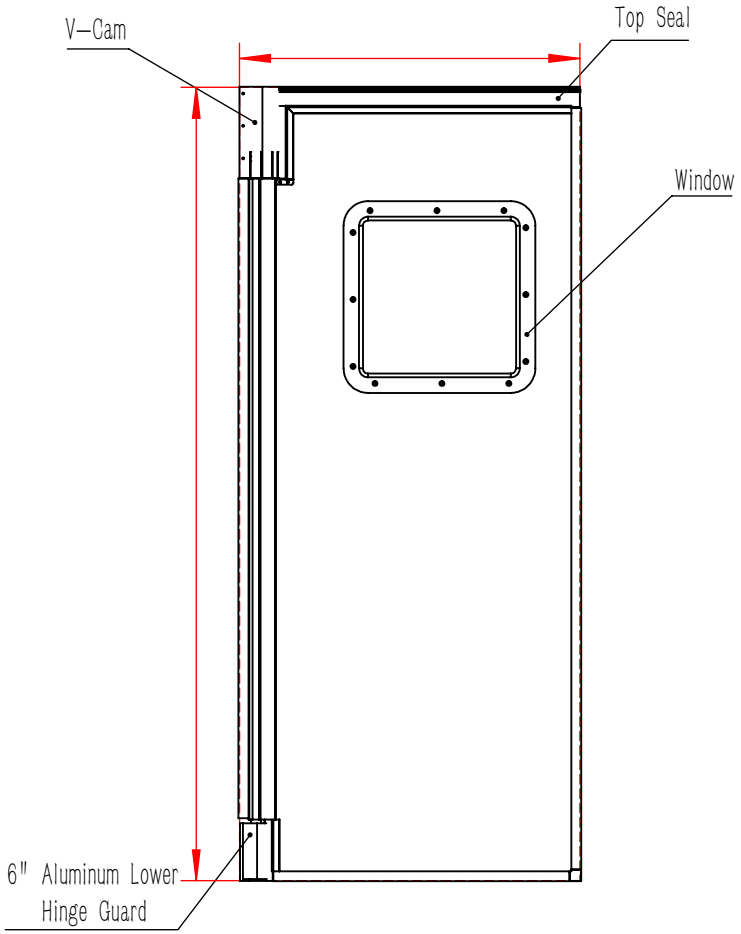

FINISHED OPENING SIZE. (W) (H)

ABS PANEL COLOR.

STAINLESS STEEL FINISH ☐

(MODEL:PL38V-SS)

SPRING BUMPERS. ☐

HEIGHT.

IMPACT PLATES. ☐

HEIGHT.

STAINLESS STEEL. ☐

ABS. ☐ COLOR.

MOUNTINGFASTENERS.

WOOD JAMBS ☐

METAL JAMBS ☐

GASKETS.

FULL. ☐

WINDOWS.

STANDARD. 16"X16" ☐ 10"X16" ☐

10"X30"ADA ☐ 12"X30" ☐

SINGLE PANE. ☐

OPTIONS.

PUSH PLATES. ☐

ABS. ☐

STAINLESS STEEL. ☐

CART GUARD. ☐

HEIGHT FROM FLOOR.

CANE BOLT.

TOP. ☐ BOTTOM. ☐

CHAIN LOCKING SLEEVES. ☐

OTHER REQUIRED OPTIONS.

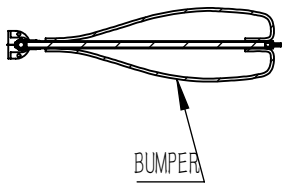
BUMPER

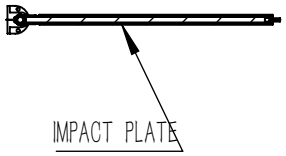
IMPACT PLATE

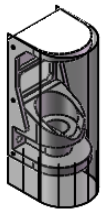
V-Cam

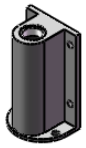
Lower Hinge Guard

QUANTITY.

M/F.

CUSTOMER.

JOB.

DATE.

SIGNATURE.

SHIP TO.

QUOTE. ☐ ORDER. ☐ #.

TDK DOORS

PL 38V (Single)